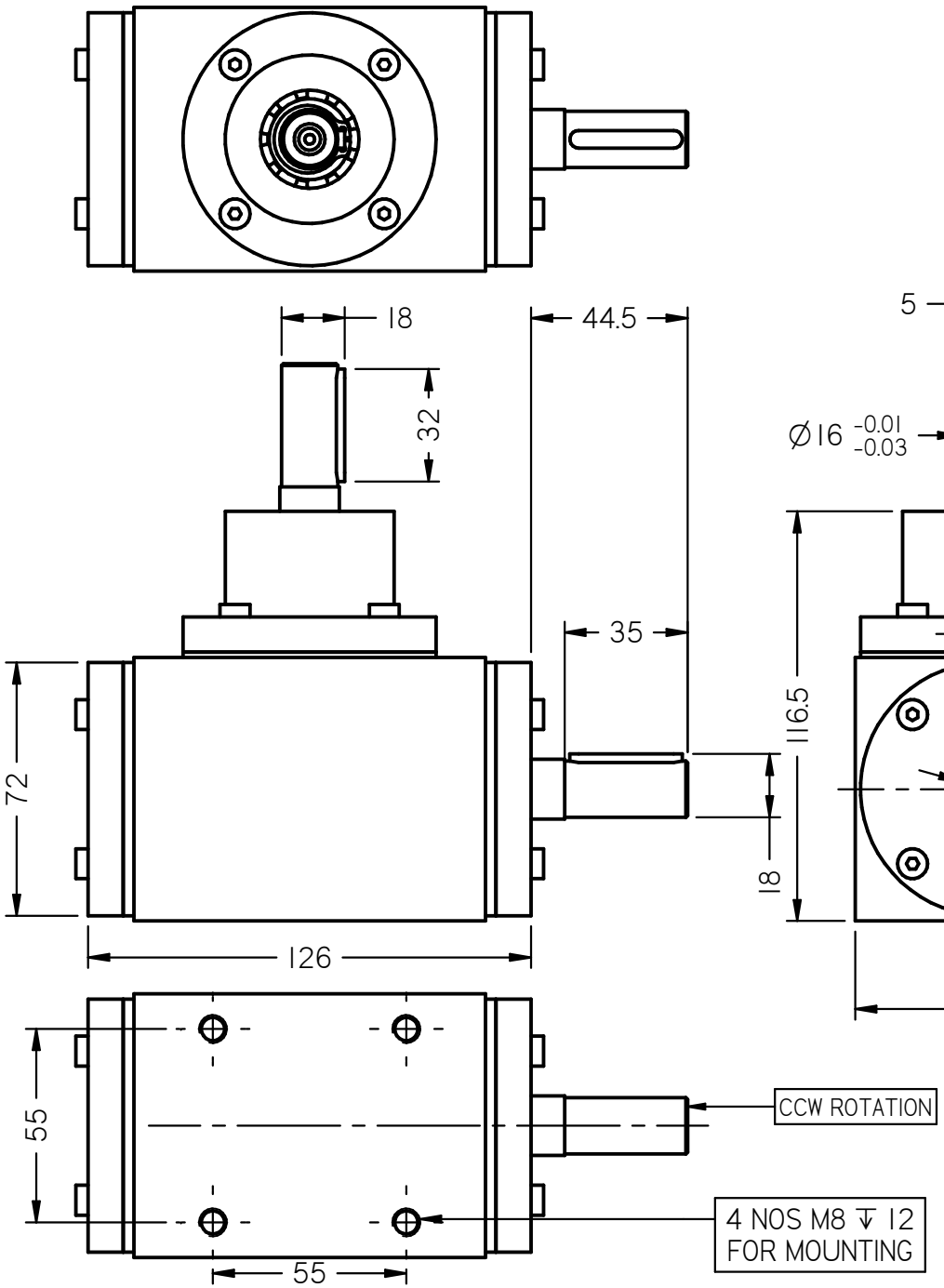

TORQUE RATING			
DRG. NO.	TORQUE AT 30 RPM	TORQUE AT 1000 RPM	TORQUE AT 1400 RPM
TECHNO-2001	12	7	6
UNITS: TORQUE-NM, DIMENSIONS-MM			

TECHNOCRAFT ENGINEERS
B-19,MIDC FLATTED FACTORY,L.B.S. ROAD, THANE-400 604.

SIZE		REV
A4	G.A. DRAWING	02.12.22

TECHNOCRAFT BEVEL GEARBOX 1101-2001

SCALE: NTS	WEIGHT:	SHEET 2 OF 3